| RevNo | Revision note | Date | Signature | Checked |
|---|---|---|---|---|
| | | | | |

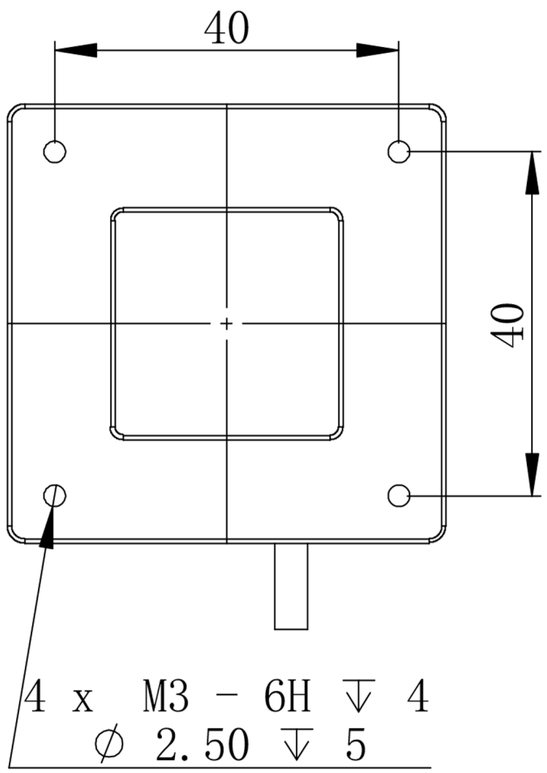


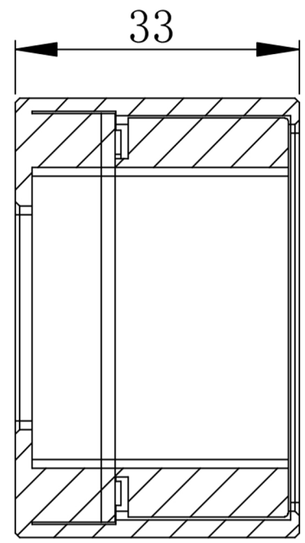


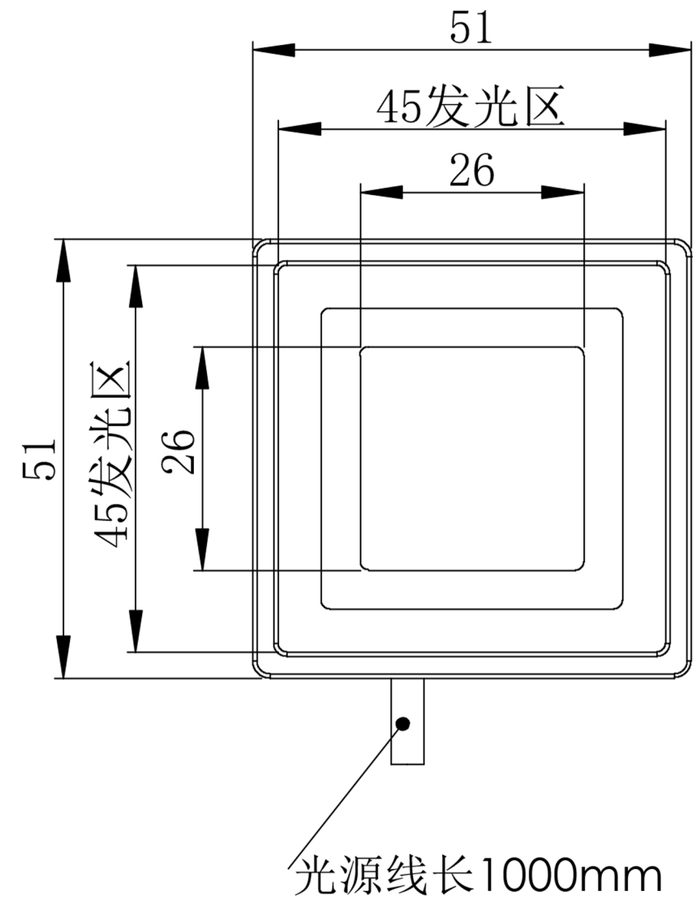


Details of Connector

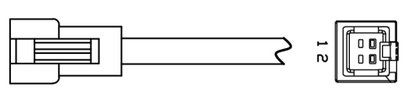


Pin1: - (Blue)
Pin2: + (Red)

Connector Type: SMR-03V-B (Light Side)
SMP-03V-BC (Power Supply Side)

Specification:

| MODEL | PL-RIH51-W/-B/-G/-UV | -R/-IR850/-IR940 |
|---|---|---|
| Wavelenth (nm) | 6500K/470/530/385 | 625/850/940 |
| Power Supply | DC24V/2.1 (W) | DC24V/1.5 (W) |

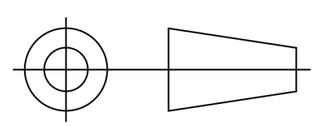

| Itemref | Quantity | Material: AL/ACRIL | | Article No./Reference | |
|---|---|---|---|---|---|
| | | | Filename PL-RIH51 | | Scale 1/1 |

PL-RIH51-U

| PL-RIH51-0000 | Edition VER.1.0 | Sheet 1 |
|---|---|---|